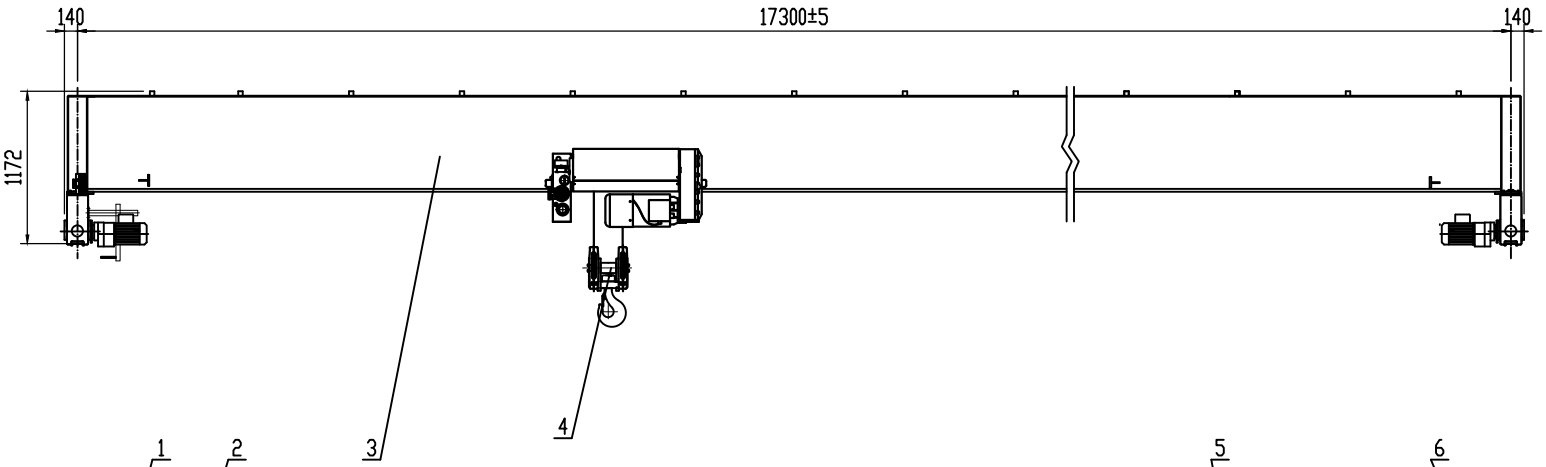

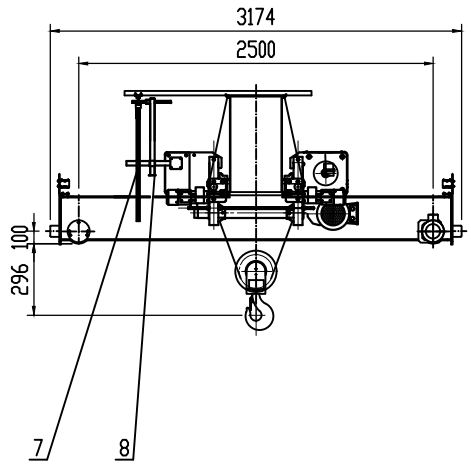

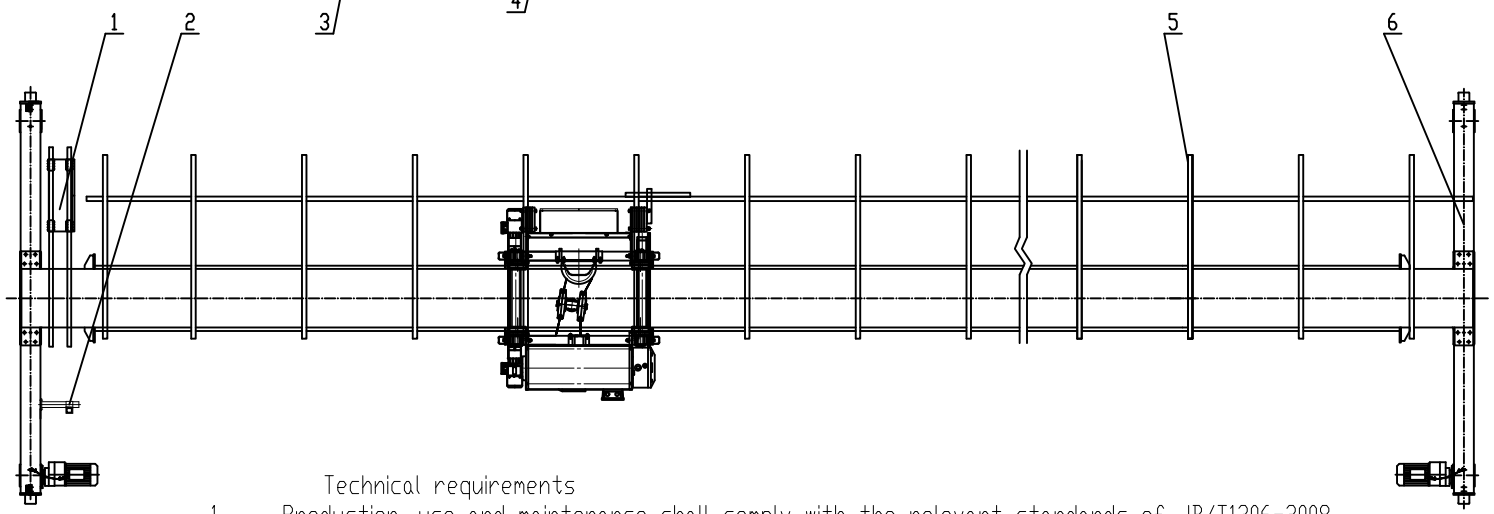

Technical requirements

1. Production, use and maintenance shall comply with the relevant standards of JB/T1306-2008.
2. Operation mode: remote control.
3. Positioning accuracy of this machine: medium.

Technical parameter

Capacity t	5	Span m	17.3
Travel system	Reducer motor	GRF39-22.27/0.55kw×2	
	Travel speed m/min	3-30	
Lift system	Model	KS	
	Lift height m	6	
	Lift speed m/min	5/0.8	
	Travel speed m/min	5-20	
Work duty	A5	Max wheel load KN	36
Wheel dia	ϕ160	Rail model	P24
Voltage	3AC 380v 50hz		

No	Item	Name	Qty	Material	Unit Weigh(kg)	Tol	Remark
8		Hoist conductive frame	Part	1			
7		Electrical	Part	1			
6		End carriage	Part	2			
5		Hoist Conductive frame	Part	1			
4		Electric Hoist	Part	1			
3		Main beam	Part	1			
2		Electrical	Part	1			
1		Long travel Conductive frame	Part	1			

Marker	Revise	Reversion	Date
Created		Signature	
Collated by		Standardized by	
Checked by		Judgement	
Technology		Date	2025.7.11

Single beam Overhead crane
HD5T-S17.3m A5

Marker	Weight(kg)	Scale
	4490	

Client: LTD SELCON

河南省矿山起重机有限公司
HENAN KUANGSHAN CRANE CO.,LTD.
www.kscranegroup.com