电动葫芦
Electric Hoist

简介 A Brief Introduction

CD_1型，MD_1型钢丝绳电动葫芦是一种轻小型起重设备。它可以安装在葫芦单梁，桥式起重机，门式起重机，悬臂起重机上。稍加改动，还可作卷扬用。因此，它是工厂、矿山、港口、仓库、货场、商店等常用的起重设备之一，是提高劳动效率，改善劳动条件的必备机械。

CD_1型电动葫芦的起升速度为常速，可以满足一般使用要求；MD_1型电动葫芦具有两种起升速度——常速和慢速。慢速工作时，可以满足精密装卸，砂箱合模，机床检修等精细作业的要求。所以，MD_1型电动葫芦的使用范围比CD_1型电动葫芦更为广泛。

为满足较大吨位起重作业的需要，公司生产HC型大吨位。

Model CD_1, MD_1 Wirerope Electric Hoist is a small-sized lifting equipment, which can be mounted on singlebeam, bridge, gantry and arm cranes. With slight modification, it can also be used as a winch. It is widely used in factories, mines, harbours, warehouses, cargo storage areas and shops, es sential in raising working efficiency and improving working conditions.

Model CD_1 Electric Hoist has only one normal speed, which can satisfy normal application. Model MD_1 Electric Hoist provides two speeds: normal speed and low speed. At a low speed, it can do precise loading and unloading, mounding of sand box, maintenance of machine tools, etc. Thus, model MDI Electric Hoist is more widely than Model CD_1.

To meet the needs of lifting heavier cargo, our factory also manufactures HC20t electric hoist.

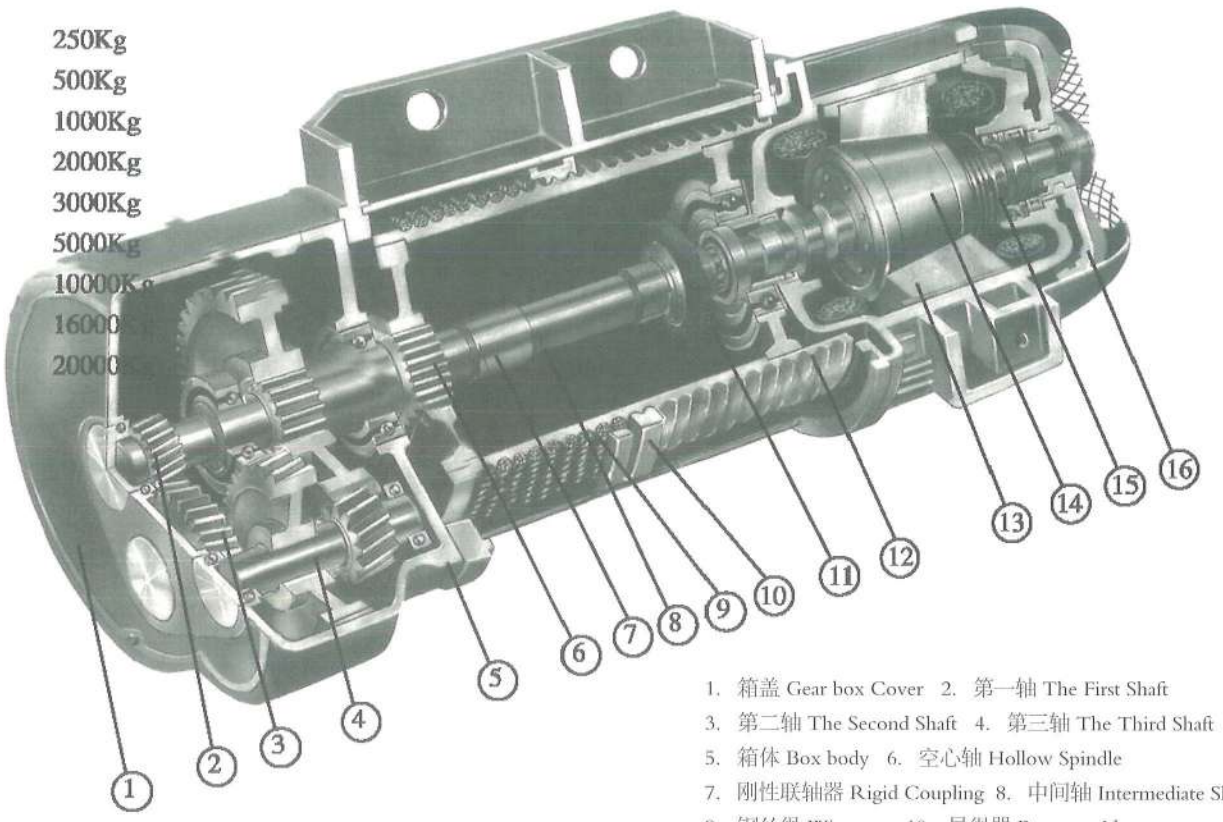

1. 箱盖 Gear box Cover 2. 第一轴 The First Shaft
3. 第二轴 The Second Shaft 4. 第三轴 The Third Shaft
5. 箱体 Box body 6. 空心轴 Hollow Spindle
7. 刚性联轴器 Rigid Coupling 8. 中间轴 Intermediate Shaft
9. 钢丝绳 Wirerope 10. 导绳器 Rope-quide
11. 弹性联轴器 Flexible coupling 12. 卷筒 Winding drum
13. 定子 Stator 14. 转子 Rotor
15. 压簧 Return spring 16. 制动器 Brake

本样本所提供重量为设计值，制造值为±5~15%。
The weight of this sample is design value and actual weight varies ±5~15%.

$CD_1.MD_1$型电动葫芦

$CD_1.MD_1$ Type Electric Hoist

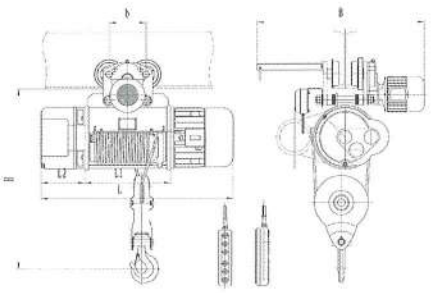

CD_1/MD_1型0.25–5吨（H=6–9米）

Model CD_1/MD_1 0.25–5t(H=6–9m)

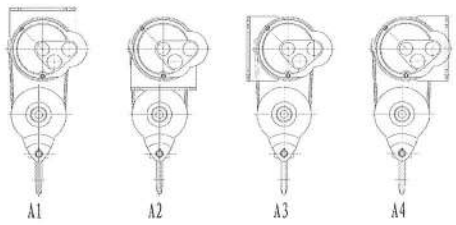

CD_1/MD_1型固定式

Model CD_1/MD_1 Stationary

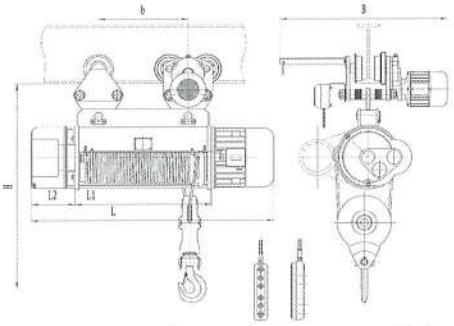

CD_1/MD_1型0.5–5吨（H=12–30米）

Model CD_1/MD_1 0.5–5t(H=12–30m)

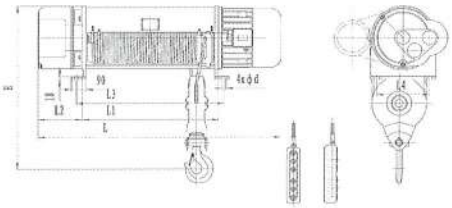

CD_1/MD_1型固定式0.5–5吨（H=12–30米）

Model CD_1/MD_1 Stationary0.5–5t(H=12–30m)

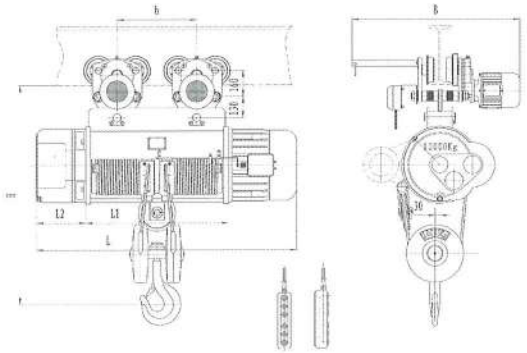

CD_1/MD_1型10吨（H=9–30米）

Model CD_1/MD_1 10t(H 9–30m)

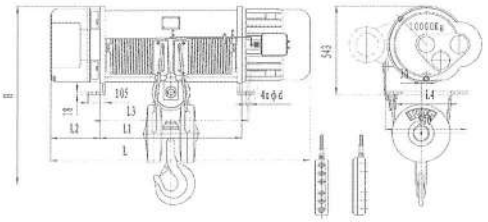

CD_1/MD_2型固定式10吨（H=9–30米）

Model CD_1/MD_1 Stationary 10t(H=9–30m)

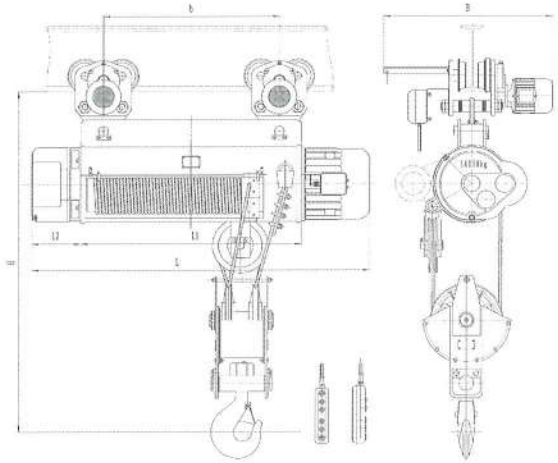

CD_1/MD_1型16吨（H=9–30米）

Model CD_1/MD_1 16t(H =9–30m)

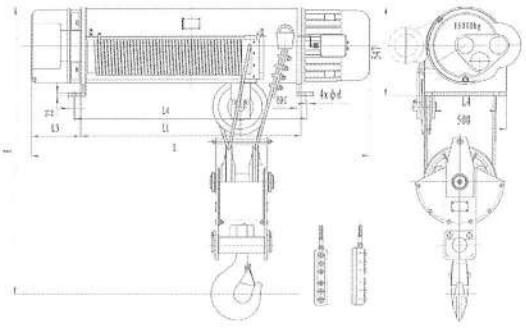

CD_1/MD_1型固定式16吨（H=9–30米）

Model CD_1/MD_1 Stationary 16t(H=9–30m)

主要技术参数及外形尺寸 Main Technical Parameter Overall Dimension

| 型号 | | Type | CD_1 , MD_1 | | |